XOMOX®

brands you trust.

XOMOX High-Performance Butterfly Valve 800 ISO
PN 10 - PN 40

CRANE®
ChemPharma Flow Solutions

www.cranechempharma.com

XOMOX

HP Butterfly Valve 800 ISO Double Offset Design

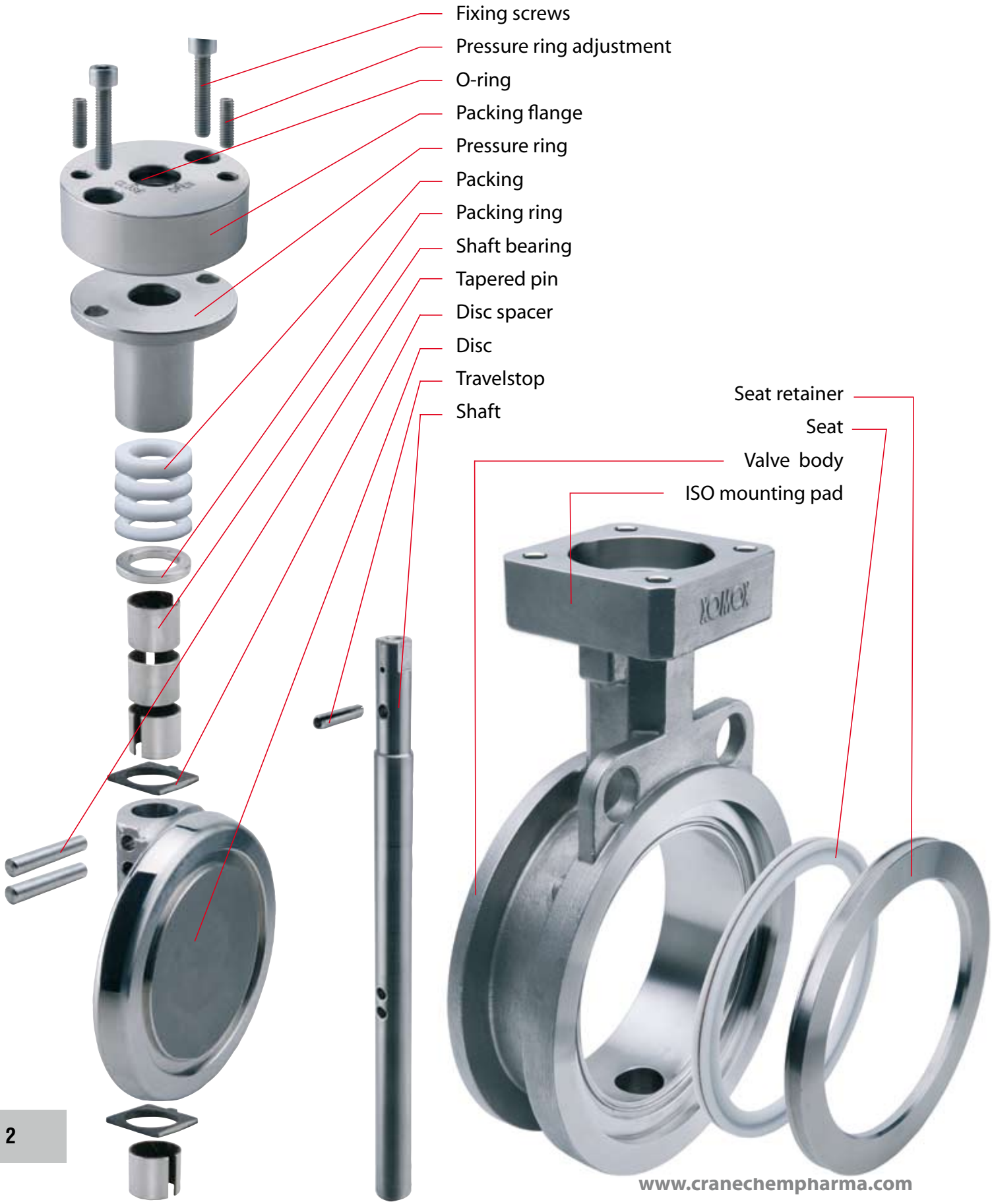

HP Butterfly Valve 800 ISO Key Product Features

The exclusive, flexible O-ring inside the packing flange prevents dirt from entering the inside of the valve and the packing.

The DIN-ISO mounting head permits the use of standardized ISO brackets for actuation. Also, actuation can be directly mounted on the valve more economically.

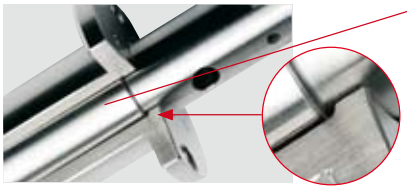

Increased blow-out safety is achieved through improved shaft design. Even if the tapered pin connection between shaft and disc is lost, the shaft is still in a stable position.

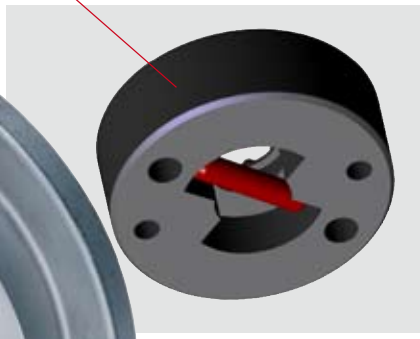

The integrated travel stop protects the seat from damage that can result from over-travel of the disc.

The extended bodyneck enables standardized insulation. With thicker insulation, lower heat loss occurs.

All valves are offered with a smooth seat retainer as standard. Optionally, the lug-design valves are available with a bolted seat retainer for double dead-end service.

The closed bottom of the valve body eliminates a potential leak path. The increased safety improves economic efficiency of the plant.

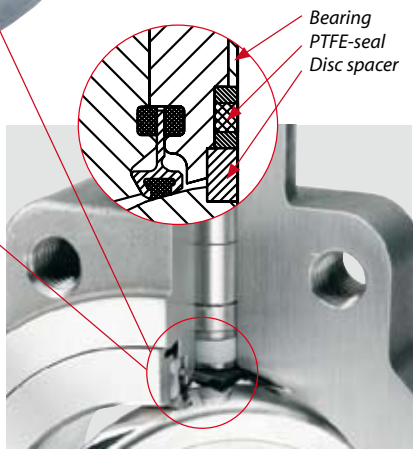

The optional **primary stem seal** prevents dirt from entering the bearing area above and below the disc. This is especially important for sticky or dusty media.

XOMOX

HP Butterfly Valve 800 ISO
Superior Sealing and Extended Service Life

An important feature of the seat is that it is axially pliant.

Unlike other seals, it is not susceptible to radial stretch.

When the valve opens, the seat flexes axially, and returns to its original compact shape.

It does not "relax" into the flow path.

This seat design includes two components:

- An outer segment of PTFE.
- A deformation-resistant, memory-core membrane.

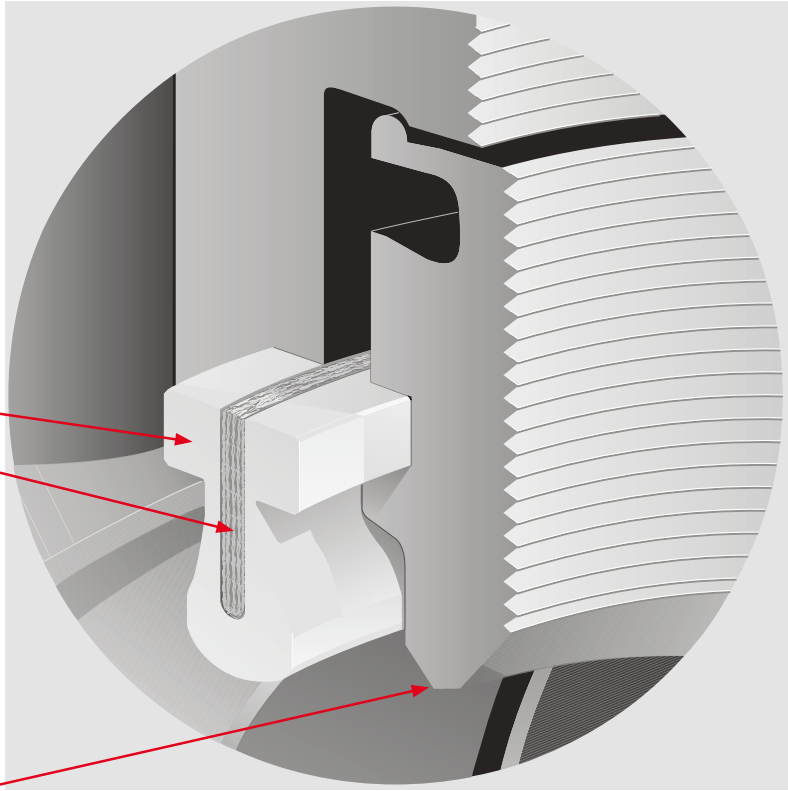

Simply superior

The genius is in its simplicity. There are no springs to break, O-rings to swell, or metal hoops to corrode. Installation is also simple and virtually error-proof. Two versions are available: soft and firesafe seat.

The seat retainer eclipses the seat, protecting it from erosion and abrasion.

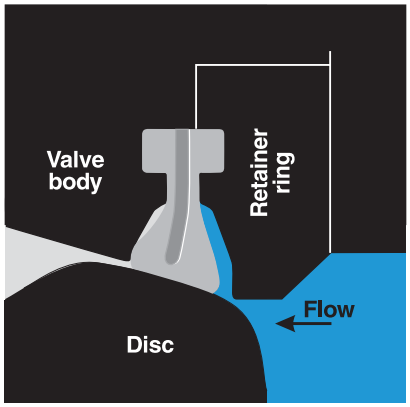

Valves closed, with right to left flow
The axial movement of the seat in the direction of the flow produces a pressure-assisted vitually leak-tight seal. (As line pressure increases, the seal tightens.) From vacuum through high pressure, tight shutoff is maintained.

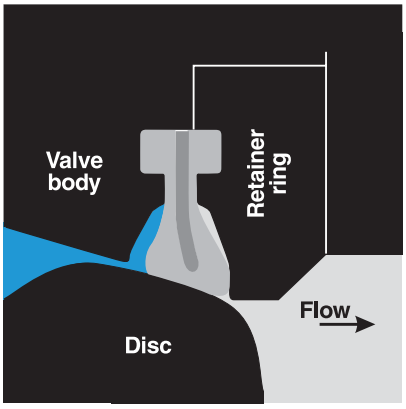

Valve closed, with left to right flow
Bi-directional flow and shutoff are easily accommodated. The same, simple, axial movement of the seat assures a reliable seal in either direction.

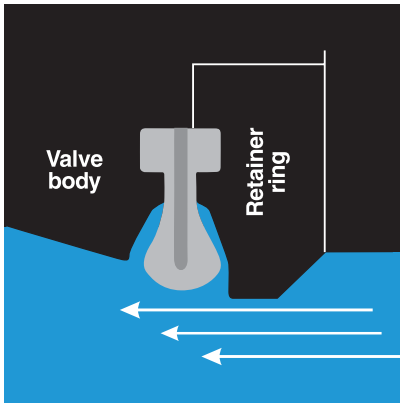

Valve open, with media flowing
Even after 100,000 cycles the seat maintains a tight seal. The seat's internal pliant membrane is the "memory core" that inhibits radial deformation.

To further extend seat life, the inside diameter of the retainer ring is smaller than that of the PTFE seat. This protects the seat from erosion and abrasion.

HP Butterfly Valve 800 ISO
Soft Seat Sealing with Fire-Tested Safety

For applications involving flammable media, the dual component seat offers both superior sealing and fire-tested security.
It provides tightness according to leak rate A (EN12266-1) up to 300°C.

Proven Performance

Numerous test results demonstrate this valve indicate that meets or exceeds the requirements of API-607 Fourth Edition as well as BS SPEC 6755 Part 2.

The seat combines PTFE and metal sealing elements. The metal component is available in a variety of different alloys.
This seat establishes both a PTFE-to-metal seal and a dual metal-to-metal seal.

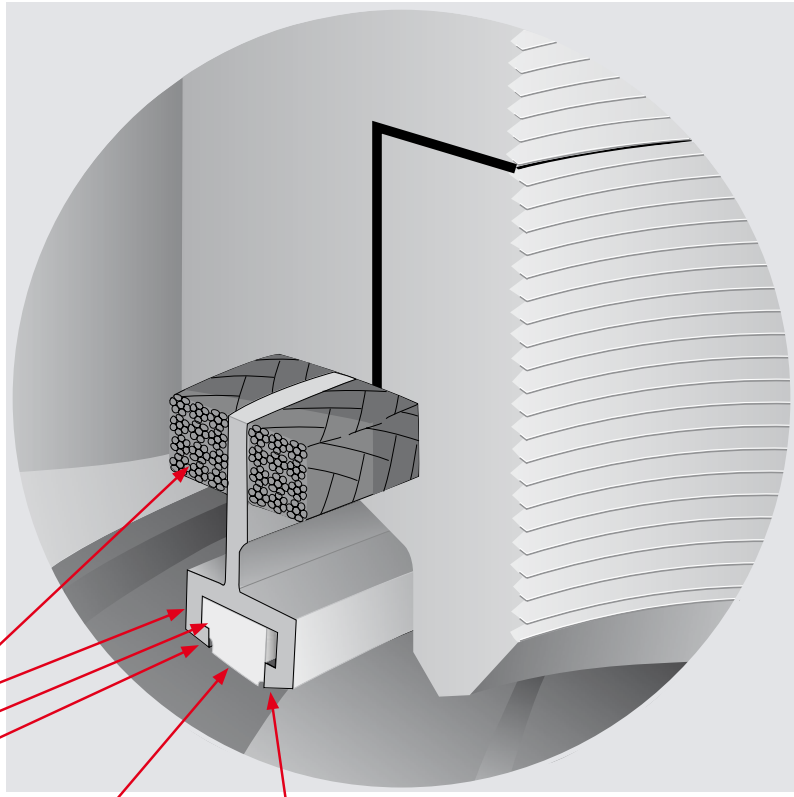

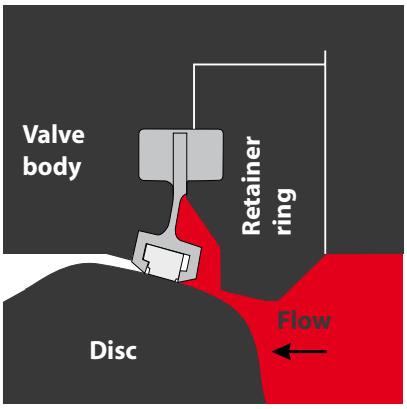

Normal operation - right to left flow
This unique seat is designed for bi-directional flow control.

As pressure increases, the seat flexes axially in the direction of the flow. This tightens the seat contact with the disc for effective sealing.

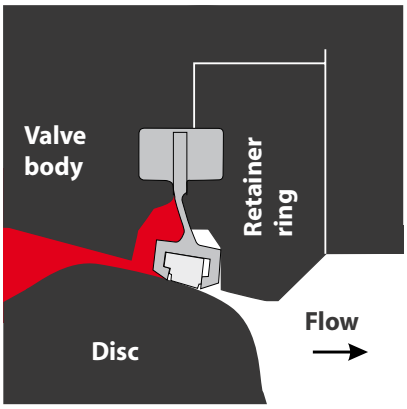

Normal operation - left to right flow
Both the metal seat and the PTFE seat are in tight contact with the disc. As line pressure increases, the seal tightens, axially.

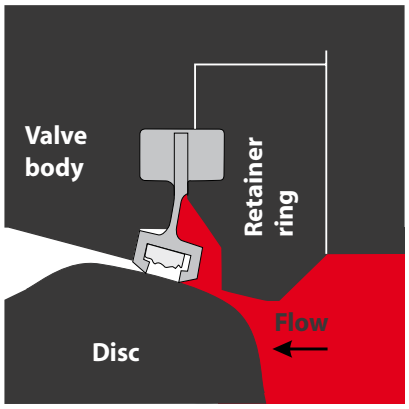

Fire emergency
In a fire emergency, as the PTFE portion of the seat deteriorates, the metal portion of the seat maintains the integrity of the seal.

HP Butterfly Valve 800 ISO Dimensions

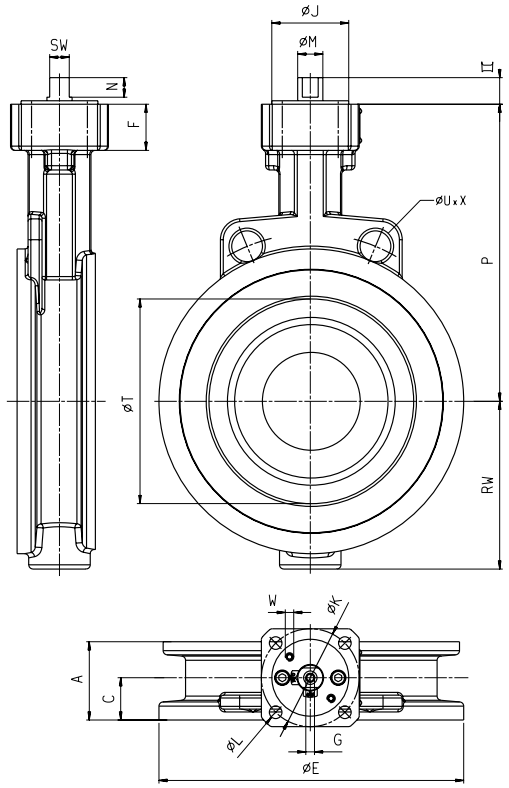

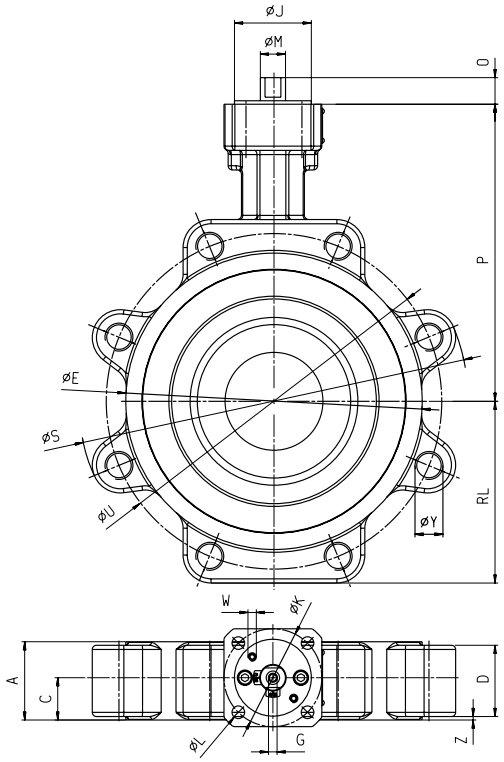

Dimensions PN 10/16 [mm]

DN	ISO Flange	PN	Face-to-face dimension A R20	Face-to-face dimension A R25	C	D	øE	F	G	øJ	øK	øL	øM	N	O
80	F05	10 - 16	46	49	23	36	142	30	M6	35	50	7.0	14	11	16
100	F07	10 - 16	52	56	26	45	162	33	M6	55	70	9.0	14	11	16
150	F07	10 - 16	56	70	30	51	218	33	M6	55	70	9.0	18	14	19
200	F10	10 / 16	60	71	33	54	273	34	M8	70	102	11.0	22	17	22
250	F12	10 / 16	68	76	39	56	328	36	M8	85	125	13.5	28	22	27
300	F14	10 / 16	78	83	45	62	378	38	M10	100	140	17.5	36	27	32

Dimensions (continued)

DN	ISO Flange	PN	P	RL	RW	øS	SW	øT	øU	W	øX	Y	Z R20	Z R25	Weight Wafer / Lug [kg]
80	F05	10 - 16	170	90.0	78	192	11	79	160	M6	18	8 x M16	5.0	5.0	4.6 / 7.3
100	F07	10 - 16	180	100.0	90	212	11	102	180	M6	18	8 x M16	4.0	4.0	7.0 / 10.0
150	F07	10 - 16	213	130.0	120	278	14	146	240	M6	22	8 x M20	2.5	7.3	12.2 / 18.8
200	F10	10 16	240	167.5	145	339	17	190	295	M6	22	8 x M20 12 x M20	4.5	8.5	19.0 / 33.4
250	F12	10 16	273	196.5	179	405	22	235	350 355	M6	22 26	12 x M20 12 x M24	11.0	11.0	31.0 / 45.2
300	F14	10 16	300	220.0	205	454	27	281	400 410	M6	22 26	12 x M20 12 x M24	14.0	14.0	45.8 / 61.8

HP Butterfly Valve 800 ISO Dimensions

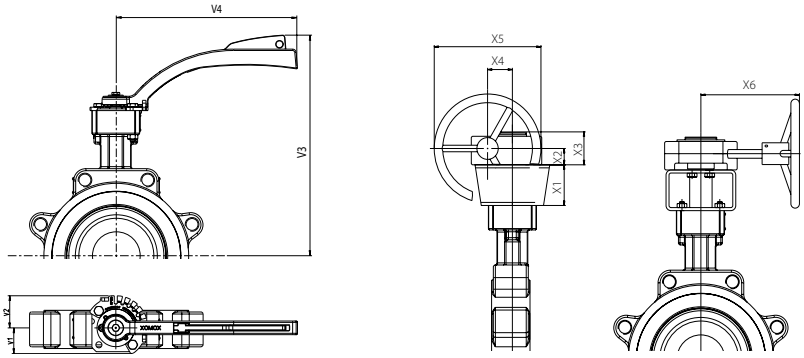

Dimensions in [mm]		Latching Lever					Manual Gear					
DN	PN	V1	V2	V3	V4	Steps	X1	X2	X3	X4	X5	X6
80	10-16 25-40	33 38	33 47	266 280	170 264	5 x 18° * 6 x 15°**	60 60	27 27	58 58	39 39	150 150	133 133
100	10-16 25-40	38 38	47 47	290 298	264 264	6 x 15° 6 x 15°	60 60	27 27	58 58	39 39	150 150	133 133
150	10-16 25-40	38 n/a	47 n/a	322 n/a	264 n/a	6 x 15° n/a	80 80	35 35	67 67	52 52	203 203	163 163
200	10-16 25-40	n/a	n/a	n/a	n/a	n/a	80 80	35 42	67 81	52 67	203 305	163 200
250	10-16 25-40	n/a	n/a	n/a	n/a	n/a	80 80	42 42	81 81	67 67	305 305	200 200
300	10-16 25-40	n/a	n/a	n/a	n/a	n/a	80 100	42 50	81 94	67 90	305 457	200 267

Dimensions PN 25/40 [mm]

** Closed / 18° / 36° / 54° / 72° / Open*
*** Closed / 15° / 30° / 45° / 60° / 75° / Open*

			Face-to-face dimension A												
DN	ISO Flange	PN	R20	R25	C	D	øE	F	G	øJ	øK	øL	øM	N	O
80	F07	25 - 40	46	49	23	41.0	142	33	M6	55	70	9.0	14	11	16
100	F07	25 - 40	52	56	26	47.0	168	33	M6	55	70	9.0	18	14	19
150	F10	25 - 40	56	70	30	53.5	224	34	M8	70	102	11.0	22	17	22
200	F12	25 - 40	60	71	33	59.0	284	37	M8	85	125	13.5	28	22	27
250	F14	25 - 40	68	76	39	64.5	340	40	M10	100	140	17.5	36	27	32
300	F16	25 - 40	78	83	45	69.0	395	43	M10	130	165	22.0	36	27	32

Dimensions (continued)

													Z		
DN	ISO Flange	PN	P	RL	RW	øS	SW	øT	øU	W	øX	Y	R20	R25	Weight Wafer / Lug [kg]
80	F07	25 - 40	170.0	90	78	192	11	79	160	M6	18	8 x M16	3.0	3.0	5.5 / 7.9
100	F07	25 - 40	187.5	107	94	227	14	102	190	M6	22	8 x M20	3.0	3.0	7.5 / 11.4
150	F10	25 - 40	220.0	138	122	294	17	146	250	M6	22	8 x M20	2.5	2.5	14.7 / 22.8
200	F12	25 40	257.5	182	180	365	22	190	310 320	M8	26 30	12 x M24 12 x M27	1.0	1.0	26.4 / 43.4
250	F14	25 40	295.0	215	200	444	27	235	370 385	M8	30 33	12 x M27 12 x M30	4.0	4.0	41.3 / 65.2
300	F16	25 40	327.5	250	230	510	27	281	430 450	M8	30 33	16 x M27 16 x M30	9.5	9.5	60.8 / 95.0

XOMOX

HP Butterfly Valve 800 ISO Design Parameters

Pressure-Temperature Diagram

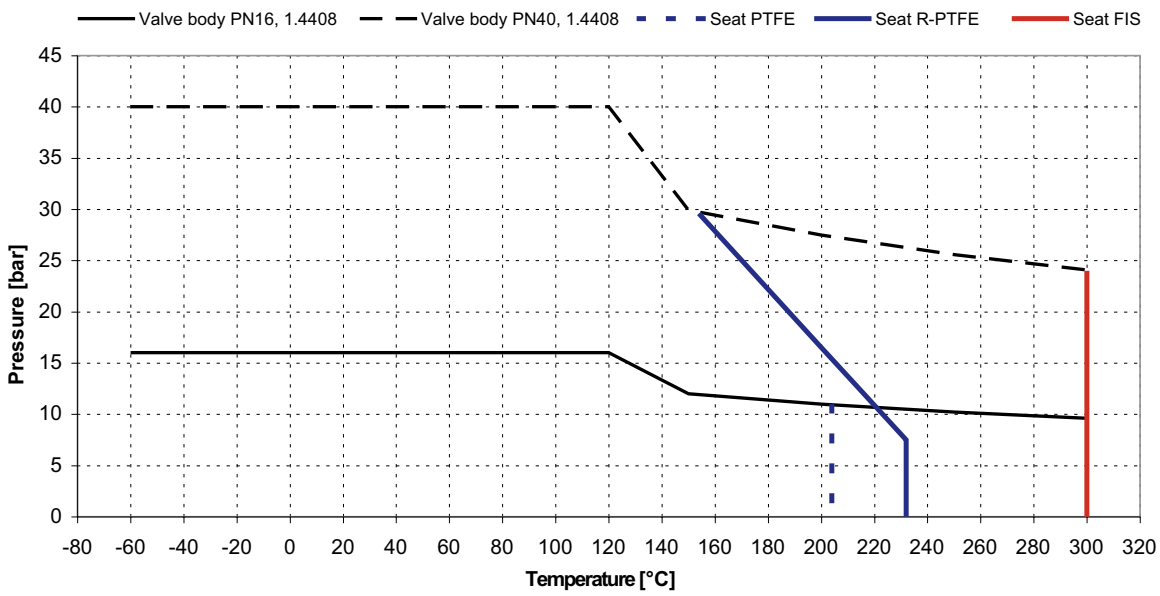

Kv-values PN 10/16

Kv-values at opening of disc [m³/h]					
DN	**18 °**	**36 °**	**54 °**	**72 °**	**90 °**
80	15	43	91	165	253
100	26	73	158	293	442
150	70	196	413	736	1154
200	120	335	709	1310	1980
250	191	532	1124	2080	3147
300	276	771	1628	2994	4627

Kv-values PN 25/40

Kv-values at opening of disc [m³/h]					
DN	**18 °**	**36 °**	**54 °**	**72 °**	**90 °**
80	13	37	79	144	222
100	24	66	144	264	406
150	64	178	376	689	1060
200	115	322	681	1247	1919
250	181	505	1068	1955	3066
300	262	732	1547	2833	4359

Cv [gal/min]= Kv * 1.156

Torque Data

	Torque PTFE-seat [Nm]			Torque R-PTFE / FIS-seat [Nm]				
Diff. Press.	**7 bar**	**14 bar**	**20 bar**	**7 bar**	**14 bar**	**20 bar**	**28 bar**	**40 bar**
DN 80	24	31	37	29	36	43	52	68
DN 100	39	50	61	46	60	72	90	115
DN 150	96	120	146	115	140	175	225	299
DN 200	181	226	277	217	270	330	425	579
DN 250	289	352	443	346	435	530	690	940
DN 300	430	543	661	516	650	790	1032	1416

HP Butterfly Valve 800 ISO Material of Construction

Tightness of Seats

For PTFE, R-PTFE and Firesafe seats:
Leak rate A according to EN 12266-1

Vacuum Service

Standard: **3.33 x 10^{-2} mbar**
Special: **1.33 x 10^{-6} mbar**

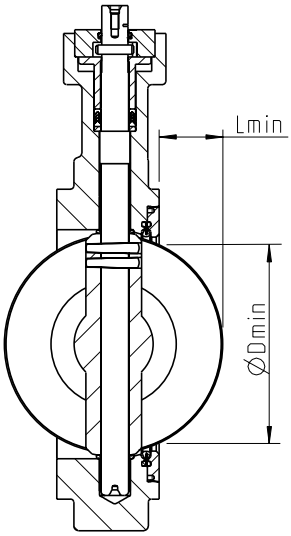

Minimum pipe diameter for connecting flanges

Minimum pipe diameter in connecting flanges		
DN	**øDmin [mm]**	**Lmin [mm]**
80	73	20
100	96	30
150	141	50
200	186	70
250	233	90
300	280	111

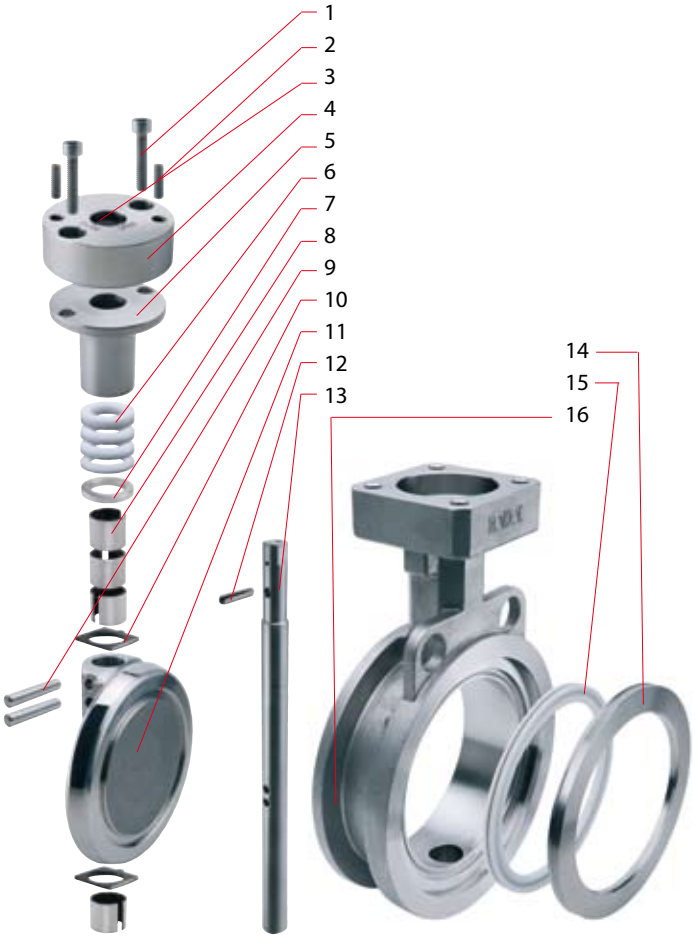

Materials of Construction

		Material	
Pos. No.	**Part**	**Soft seated**	**Firesafe**
1	Fixing screw	A4-70	A4-70
2	Pressure ring adj. screw	A4-70	A4-70
3	O-ring	FPM (Viton)®	FPM (Viton)®
4	Packing flange	1.4408 / 1.4571	1.4408 / 1.4571
5	Pressure ring	1.4408 / 1.4571	1.4408 / 1.4571
6	Packing	PTFE	Graphite
7	Packing ring	1.4571	1.4571
8	Shaft bearing	1.4571 / PTFE	1.4571, nickel plated
9	Tapered pin	A564-630	A564-630
10	Disc spacer	A564-630	A564-630
11	Disc	1.4408	1.4408
12	Travel stop	1.4310	1.4310
13	Shaft	A564-630	A564-630
14	Seat retainer	1.4408	1.4408
15	Seat	PTFE / R-PTFE	1.4571 / PTFE
16	Valve body	1.4408 / 1.0619	1.4408 / 1.0619
	Label	1.4301	1.4301
	Seat retainer screw (optional with Lug)	A4-70	A4-70
	Seat packing (with firesafe only)	-	See detail page 5

Bodies in material 1.0619 will be delivered with an anti-corrosive protection paint

XOMOX

HP Butterfly Valve 800 ISO How to specify

080/10 870 ISO – 025 / 025 – 0 0 - x

Size

DN 80	**080**
DN 100	**100**
DN 150	**150**
DN 200	**200**
DN 250	**250**
DN 300	**300**

Flange size

PN 10	**10**
PN 16	**16**
PN 25	**25**
PN 40	**40**

Body / Pressure / Body length

Wafer, PN 16, R20:	**870 ISO**
Wafer, PN 16, R25:	**810 ISO**
Wafer, PN 40, R20:	**877 ISO**
Wafer, PN 40, R25:	**830 ISO**
Lug, PN 16, R20:	**872 ISO**
Lug, PN 16, R25:	**812 ISO**
Lug, PN 40, R20:	**876 ISO**
Lug, PN 40, R25:	**832 ISO**

Body material

1.4408	**025**
1.0619	**010**

Disc material

1.4408	**025**

Seat material

PTFE	**0** (Standard for PN 10/16)
R-PTFE	**1** (Standard for PN 25/40)
Firesafe	**8**
PTFE mod.	**A**
R-PTFE mod.	**B**
Metal/PTFE	**C**

(mod. = modified)

Shaft seal material

PTFE	**0**
Graphite	**1**

Optional equipment

Leak control	**1**
Primary stem seal	**9**
Heating jacket	**HR** (threaded) **HJ** (flanged)
Other options:	**consult factory**

If DDES (double-dead-end service) is required for the lug-type HPBV, the valve has to be equipped with bolted seat retainer (optional).

For extended size ranges, temperatures and pressures or in ASME dimensions, ask for our "Type 800".

Also with type 800 we offer a great variety of high alloy body materials to serve demanding applications.

Certificates and Standards

- TA Luft acc. to VDI 2440
- FIRESAFE acc. to API 607, 4th edition, and EN ISO 10497:2000
- DGRL 97/23/EG: PED-H-128

Typical Applications

- Chemical process
- Oxygen
- Seawater
- Air separation
- Sulphur recovery
- Hydrogen

About CRANE ChemPharma Flow Solutions, XOMOX

Product Selection

Xomox offers a broad range of process valves, actuators, accessories, and related services including:

- XOMOX® Process Valves
- Matryx® Vane Actuators
- XOMOX XRP™ Actuators

Please refer to our website, www.cranechempharma.com, for technical documentation (pdf) and to access the worldwide network of CRANE ChemPharma XOMOX® Authorized Distributors.

About CRANE ChemPharma Flow Solutions™

CRANE ChemPharma Flow Solutions designs and manufactures a variety of high performance products including: sleeved plug valves, lined valves, high performance butterfly valves, aseptic and industrial diaphragm valves, actuation, lined pipe, fittings and hoses, and air operated diaphragm and peristaltic pumps.

Our trusted brands DEPA®, ELRO®, Krombach®, PSI®, Resistoflex®, ResistoPure™, Revo®, Saunders® and XOMOX® offer our customers complete and innovative fluid handling solutions designed for the most demanding corrosive, erosive and high purity applications within the chemical, bio-technology and pharmaceutical industries.

About XOMOX®

CRANE ChemPharma Flow Solutions, Xomox is a manufacturer of engineered industrial products, including valves for processing industries.

All major Xomox facilities are certified under ISO-9000. Engineering design centers in Cincinnati and Lindau are certified under ISO-9001. Xomox valves meet ASME, JIS and EN standards for global applications.

Cincinnati, Ohio USA

Lindau/Bodensee, Germany

Suzhou, PR China

Worldwide Capabilities

Our Manufacturing Facilities, Sales Offices and Service Centers are located in:

- Cincinnati, Ohio USA (Corp. Hdqtrs)
- Lindau, Germany (European Headquarters)
- Äänekoski, Finland
- Busan, South Korea
- Beijing, PR China
- Chihuahua, Mexico
- Cwmbran, Gwent UK
- Dubai, UAE
- Düsseldorf, Germany
- Edmonton, Alberta Canada
- Gonzales, LA USA
- Houston, TX USA
- Kanagawa , Japan
- Kewdale, Australia
- Kreuztal, Germany
- Marion, NC USA
- Mexico City, Mexico
- Montgomery, TX USA
- Norderstedt, Germany
- Monza, MI Italy
- Moscow, Russia
- Mulhouse, France
- Pforzheim, Germany
- Pune, India
- Quebec, Canada
- Shanghai, PR China
- Singapore
- St. Mary's, Australia
- Suzhou, China
- Székesfehérvár, Hungary
- Taipei, Taiwan
- Tiruchirapalli, India
- Tualatin, OR USA
- Tullamarine, Australia
- Virginia, Australia
- Waalwijk, Netherlands
- Wavre, Belgium

XOMOX®

CRANE ChemPharma Flow Solutions™

XOMOX Headquarters
4444 Cooper Road,
Cincinnati, OH 45242, U.S.A.
Tel.: (513) 745-6000
Fax: (513) 745-6086

XOMOX International GmbH & Co. OHG
Von-Behring-Straße 15,
D-88131 Lindau/Bodensee
Tel.: (49) 8382-702-0
Fax. (49) 8382-702-144

www.cranechempharma.com

CRANE
ChemPharma Flow Solutions

FLOW OF FLUIDS
www.flowoffluids.com

brands you trust.

CRANE ChemPharma Flow Solutions Include: Pipe - Valves - Fitting - Actuators - Pumps

DEPA® KROMBACH ARMATUREN® PSI® ResistoPure™ Saunders® the science inside

ELRO® RESISTOFLEX® revo® XOMOX®

CP-XOMOX-800ISO-BU-EN-A1-01/11

Crane Co., and its subsidiaries cannot accept responsibility for possible errors in catalogues, brochures, other printed materials, and website information. Crane Co. reserves the right to alter its products without notice, including products already on order provided that such alteration can be made without changes being necessary in specifications already agreed. All trademarks in this material are property of the Crane Co. or its subsidiaries. The Crane and Crane brands logotype (DEPA®, ELRO®, Krombach®, PSI®, Resistoflex®, ResistoPure™, Revo®, Saunders® and XOMOX®) are registered trademarks of Crane Co. All rights reserved.

© 2011 CRANE ChemPharma Flow Solutions, www.cranechempharma.com